BATTERY WATERING TECHNOLOGIES

THE LEADER IN BATTERY WATERING TECHNOLOGY™

PART NUMBER: GEZ-KIT24CBCTB	
VALVE: VB-TBU	
	REV. 6 10/13/2016

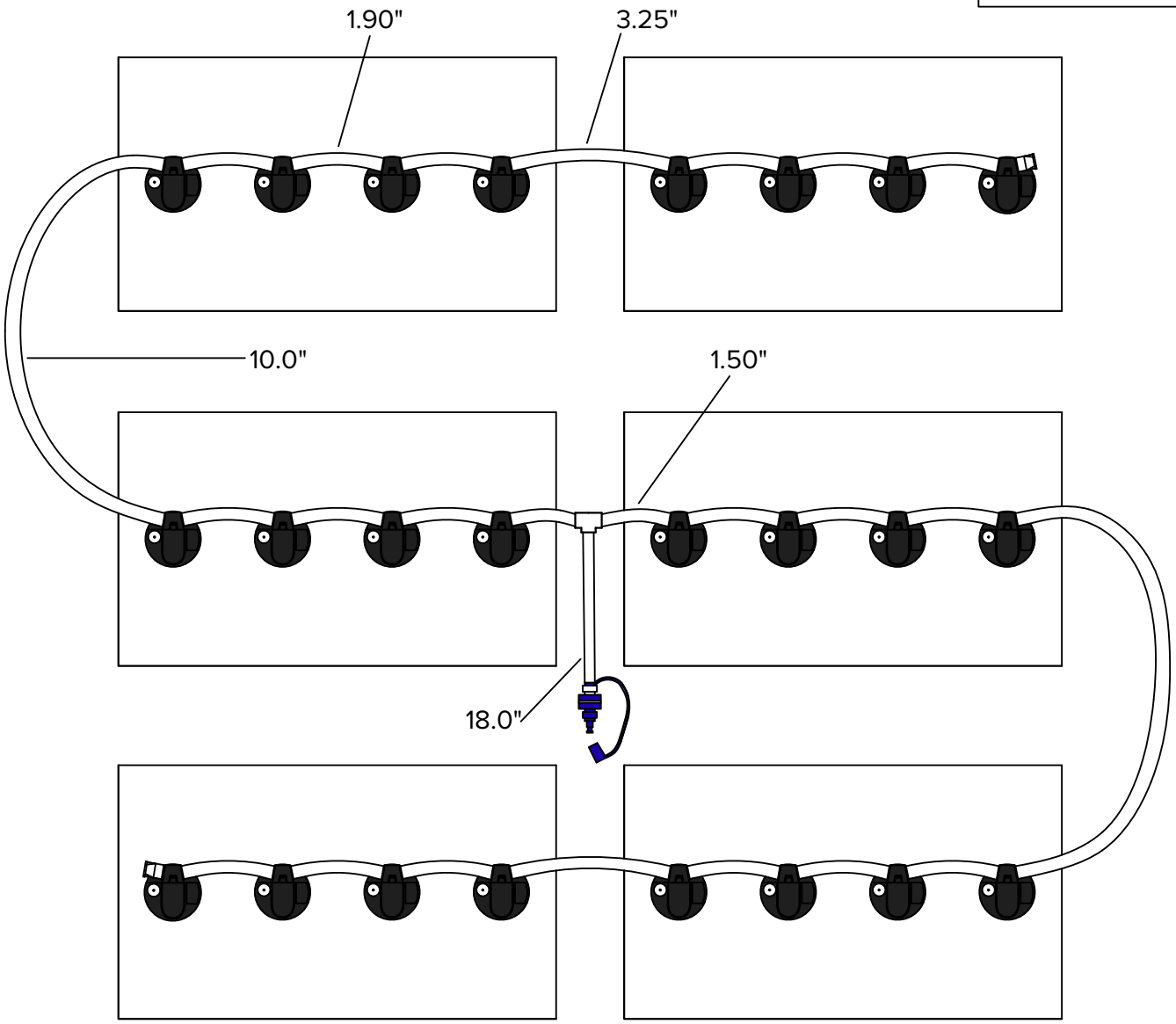

18 @ 1.90"
2 @ 1.50"
2 @ 3.25"
2 @ 10.0"
1 @ 18.0"

MAKE: E-Z-GO	MODEL: TXT48	CELL TO CELL DIMENSION: 2.3"	VOLTAGE: 8V

INSTALLATION INSTRUCTIONS

Only water batteries after charging. Do not leave unattended.

1. Remove existing battery caps.
2. Ensure the electrolyte level is covering the plates in each cell. If not, add just enough water to cover the plates.
3. Following the diagram above, insert the valves into the vent holes.
4. Push straight down on each valve until it snaps into the cell.
5. Make sure all tubing remains unobstructed.

SAFETY INFORMATION

- Prior to servicing any vehicle, please turn the key switch to the OFF position.
- Do not service any vehicle while the charger cable is plugged into the vehicle or while it is moving.
- Do not use any metal tools or have anything metal on your body while working over the batteries.
- Wear proper safety protection such as safety glasses, face shield, and rubber gloves when installing or working with batteries.
- If acid comes into contact with your skin, or eyes, flush with water and call a physician imediately.

336-714-0448 | www.batterywatering.com